FE 15-2T / FE18-2T FE20-2T

Three-Wheels Electric Forklift 1,5/1,8/2,0 t

Compact design and high performance
Dual Drive forklifts for Heavy duty use

www.f-il.de
contact@f-il.de

MOVE IT

CHARACTERISTICS

Electric Counterbalance Forklift Truck 1.5/1.8/2.0T

FE 15-2T / FE18-2T / FE20-2T

Distinguishing mark						
1.1	Manufacturer			F/F-IL	F/F-IL	F/F-IL
1.2	Model designation			**FE 15-2T**	**FE18-2T**	**FE20-2T**
1.3	Drive unit			Electrics	Electrics	Electrics
1.4	Operator type			seated	seated	seated
1.5	rated capacity	Q	t	1.5	1.8	2.0
1.6	Load center distance	c	mm	500	500	500
1.8	Load distance，centre of drive axle to fork	x	mm	400	400	400
1.9	Wheelbase	y	mm	1258	1358	1358
Weight						
2.1	Service weight （include battery）		kg	3050	3160	3430
2.2	Axle loading, laden driving wheels /steering wheels		kg	4215/335	4640/320	5050/380
2.3	Axle loading, unladen driving wheels /steering wheels		kg	1570/1480	1620/1540	1750/1680
Types,Chassis						
3.1	Tyre type,driving wheels /steering wheels			solid rubber	solid rubber	solid rubber
3.2	Tyre size, driving wheels（diameter×width）			18X7-8	18X7-8	200X50-10
3.3	Tyre size, steering wheels（diameter×width）			15X4.5-8	15X4.5-8	15X4.5-8
3.5	Wheels, number driving/steering (x=drive wheels)		mm	2x/ 2	2x/ 2	2x/ 2
3.6	Tread, Driving wheels	b_{10}	mm	902	902	936
3.7	Tread, Steering wheels	b_{11}	mm	175	175	175
Dimensions						
4.1	Tilt of mast/fork carriage forward/backward	α/ β (°)		6/6	6/6	6/6
4.2	Height, mast lowered	h_1	mm	2060	2060	2060
4.3	Free lift （load backrest）	h_2	mm	120	120	120
4.4	Lift height	h_3	mm	3000	3000	3000
4.5	Height, mast extended	h_4	mm	4058	4058	4058
4.7	Height of overhead guard (cabin)	h_6	mm	2060	2060	2060
4.8	Seat height	h_7	mm	1000	1000	1000
4.12	Tow center of pin height	h_{10}	mm	475	475	475
4.19	Overall length	l_1	mm	2765	2865	2895
4.20	Length to face of forks	l_2	mm	1845	1945	1975
4.21	Overall width	b_1/ b_2	mm	1090	1090	1150
4.22	Fork dimensions	s/ e/ l	mm	40×100×920	40×100×920	40×100×920
4.23	Fork carriage class/type A, B			A	A	A
4.24	Fork carriage width	b_3	mm	1040	1040	1040
4.31	Ground clearance, laden, below mast	m_1	mm	108	108	108
4.32	The minimum ground clearance of frame	m_2	mm	78	78	78
4.34.1	Aisle width for pallets 1000 × 1200 crossways	Ast	mm	3195	3295	3325
4.34.2	Aisle width for pallets 800 × 1200 lengthways	Ast	mm	3320	3420	3450
4.35	Turning radius	Wa	mm	1475	1575	1605
Performance data						
5.1	Travel speed, laden/ unladen		km/ h	13/ 14	13/ 14	13/ 14
5.2	Lifting speed, laden/ unladen		m/ s	0.29/ 0.43	0.27/ 0.43	0.26/ 0.43
5.3	Lowering speed, laden/ unladen		m/ s	0.44/ 0.435	0.44/ 0.435	0.44/ 0.435
5.5	Drawbar pull, laden/unladen		N			
5.6	Max. drawbar pull, laden/unladen (time)		N	/	/	/
5.7	Gradeability, laden/unladen		%	10.5/ 14.5	10.5/ 14.5	10.5/ 14.5
5.8	Max. gradeability, laden/unladen		%			
5.10	Service brake type			Mechanical/ hydraulic	Mechanical/ hydraulic	Mechanical/ hydraulic
	park brake type			Mechanical/ hydraulic	Mechanical/ hydraulic	Mechanical/ hydraulic
Electric-engine						
6.1	Drive motor rating S2 60 min		kW	4.8x2	4.8x2	4.8x2
6.2	Lift motor rating at S3 15%		kW	11	11	11
6.3	The maximum allowed size battery		mm	/	/	/
6.4	Battery voltage/nominal capacity K5		V/ Ah	48/360（Li）	48/360（Li-ion）	48/360（Li-ion）
6.5	Battery weight		kg	708	856	933
Addition data						
8.1	Type of drive unit			AC	AC	AC
10.5	Steering type			Mechanical/ hydraulic	Mechanical/ hydraulic	Mechanical/ hydraulic
10.7	Sound pressure level at the driver's ear		dB (A)	68	70	74

If there are improvements of technical parameters or configurations, no further notice will be given.
The diagram shown may contain non-standard configurations.

www.F-il.de
contact@f-il.de

F-IL

Option

	Options	FE 15-2T / FE18-2T / FE20-2T
3	Fork length	○
6	Folded fork	○
7	Battery capacity	—
12	Import battery	●
19	Cold storage	○
20	Lateral change battery	13/15None
21	fork weighing system	○
22	Overhead guard	○
30	Mast options	○
37	Attachments	○
39	Built in side shift	○
40	Proportional value	○
41	LED front light	○
42	Back light	●
43	Warning light	○
46	Fire extinguisher	●
48	Water auto-fillingsystem	○
49	Seat	○
50	Seat switch	●
51	With fan heater	○
52	With front windshield wiper	○
53	With rear windshield wiper	○
54	Cockpit	○
55	Doulbe front wheel	—
56	Rearview	○
57	OPS system	○
58	Backrest width	○
59	Environmental solid tire	○
60	Air fan	—
61	Charging voltage	○
62	Drive-in Rack	○

Note: ● standard ○ option — NA

Mast Option

Tpye	Model	Max.fork height h3	Overall height			Free lift		Front Overhang X			Tilt range		Capacity		
			Lowered h1	Extended		Without backrest	With backrest h2				FWD α	BWD β	Load capacity at 500 mm		
				Without backrest	With backrest								Single tire		
								1.5t	1.8t	2.0t			1.5t	1.8t	2.0t
		mm	mm	mm	mm	mm	mm	mm	mm	mm	Deg	Deg	kg	kg	kg
Duplex ZT	2W200	2000	1490	2515	3058	120	120	400	400	400	6	6	1500	1800	2000
	2W250	2500	1740	3015	3558	120	120	400	400	400	6	6	1500	1800	2000
	2W270	2700	1840	3215	3758	120	120	400	400	400	6	6	1500	1800	2000
	2W300	3000	1990	3515	4058	120	120	400	400	400	6	6	1500	1800	2000
	2W330	3300	2140	3815	4358	120	120	400	400	400	6	6	1500	1800	2000
	2W350	3500	2240	4015	4558	120	120	400	400	400	6	6	1500	1800	2000
	2W360	3600	2290	4115	4658	120	120	400	400	400	6	6	1500	1800	2000
	2W400	4000	2540	4515	5058	120	120	400	400	400	3	5	1400	1600	1800
	2W425	4250	2665	4765	5308	120	120	400	400	400	3	5	1300	1500	1700
	2W450	4500	2790	5015	5558	120	120	400	400	400	3	5	1250	1400	1600
Duplex ZZ	2F250	2500	1773	3015	3558	1258	715	400	400	400	6	6	1500	1800	2000
	2F270	2700	1873	3215	3758	1358	815	400	400	400	6	6	1500	1800	2000
	2F300	3000	2023	3515	4058	1508	965	400	400	400	6	6	1500	1800	2000
	2F330	3300	2173	3815	4358	1658	1115	400	400	400	6	6	1500	1800	2000
	2F360	3600	2323	4115	4658	1808	1265	400	400	400	6	6	1500	1800	2000
	2F400	4000	2523	4515	5058	2008	1465	400	400	400	3	5	1400	1700	1900
Triplex DZ	3F435	4350	1993	4865	5408	1449	935	400	400	400	3	5	1250	1450	1600
	3F450	4500	2043	5015	5558	1499	985	400	400	400	3	5	1200	1350	1500
	3F480	4800	2143	5315	5858	1599	1085	400	400	400	3	5	1100	1250	1400
	3F500	5000	2208	5515	6058	1664	1150	400	400	400	3	5	1050	1200	1350
	3F550	5500	2378	6015	6558	1834	1320	400	400	400	3	5	/	1100	1250
	3F600	6000	2593	6515	7058	2049	1535	400	400	400	3	5	/	900	1150

Note:With sideshifter minus 200Kg, with integral sideshifter minus 100Kg.

CAPACITIES

RATED CAPACITIES AND LOAD CENTERES GRAPH

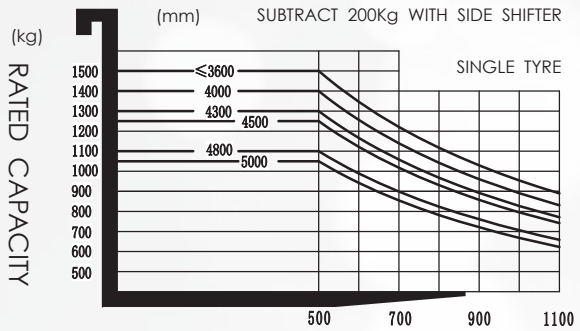

FE 15-2T

RATED CAPACITIES AND LOAD CENTERES GRAPH

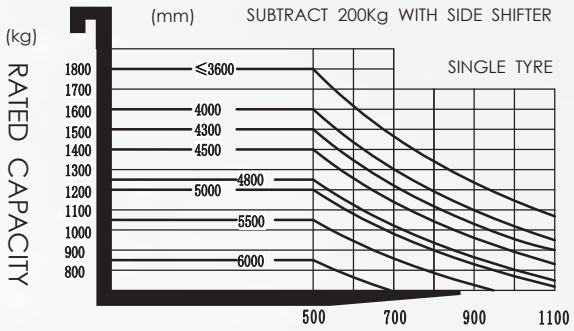

FE18-2T

RATED CAPACITIES AND LOAD CENTERES GRAPH

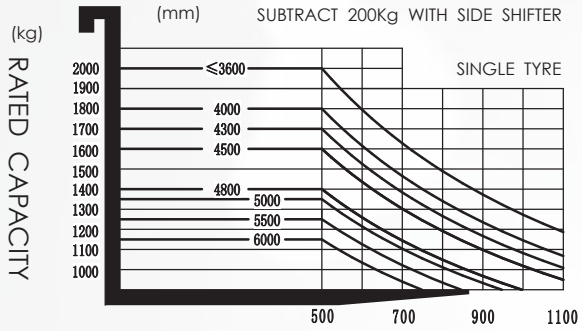

FE20-2T

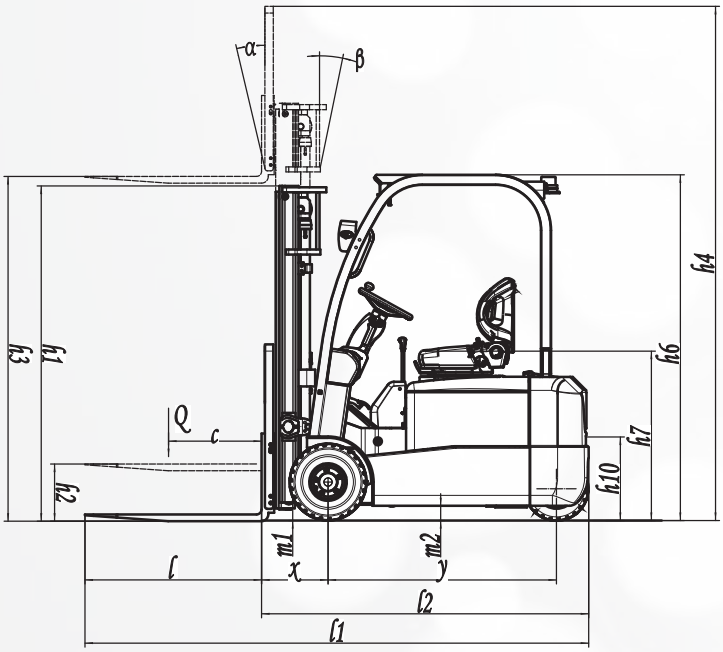

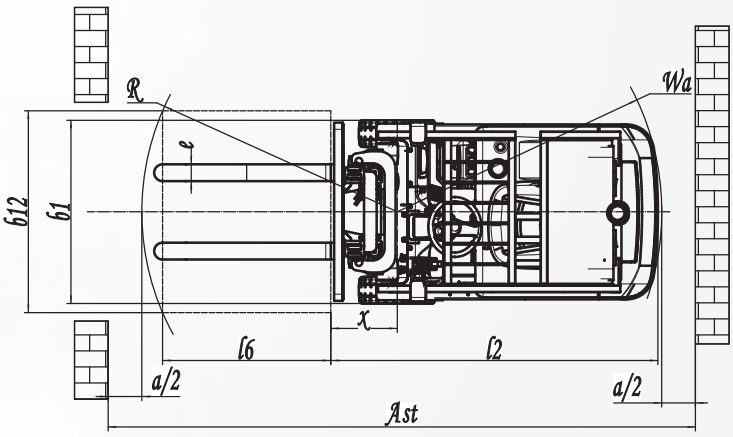

www.F-il.de
contact@f-il.de